Unit: mm

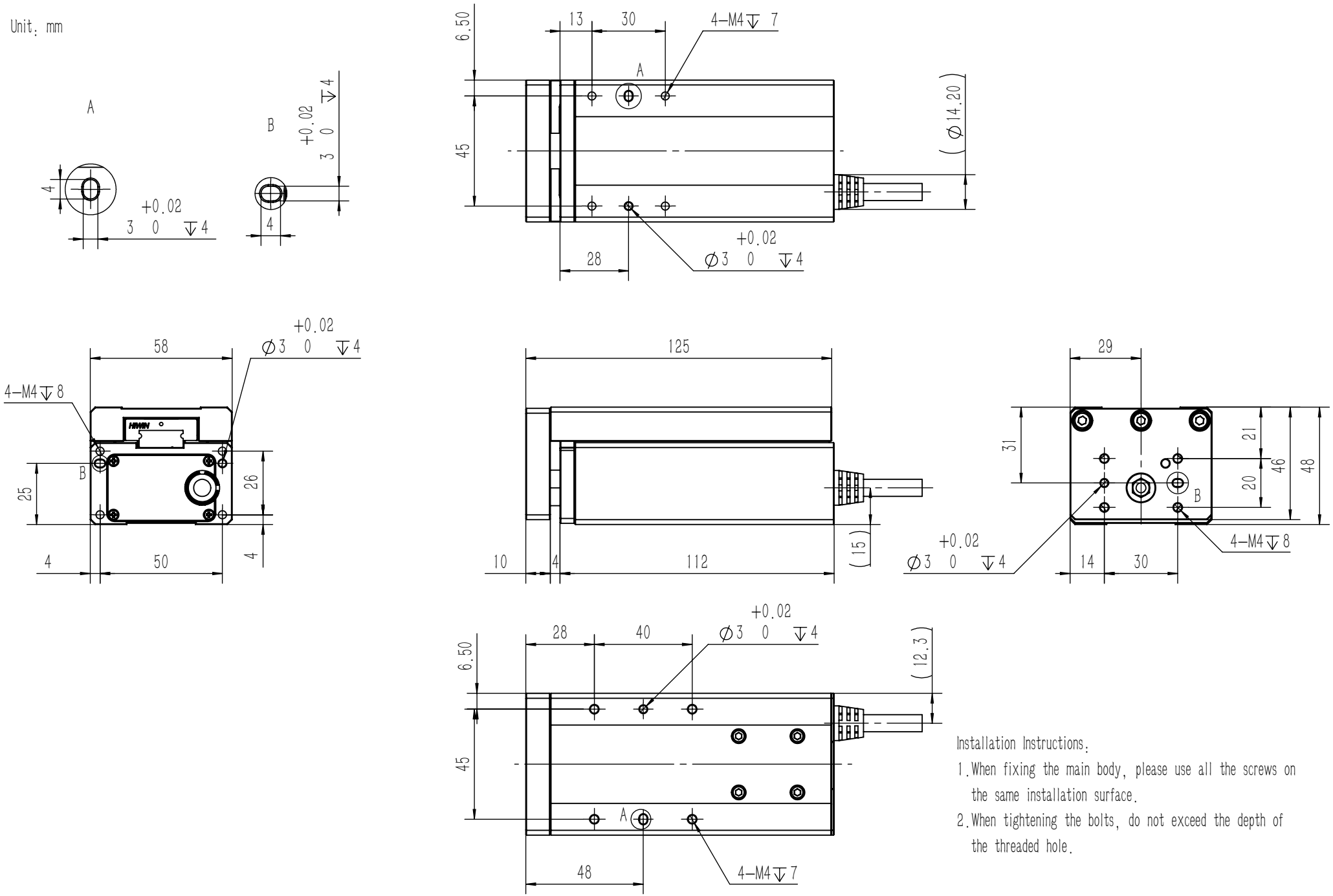

Installation Instructions:

1. When fixing the main body, please use all the screws on the same installation surface.
2. When tightening the bolts, do not exceed the depth of the threaded hole.